TAG NO. :

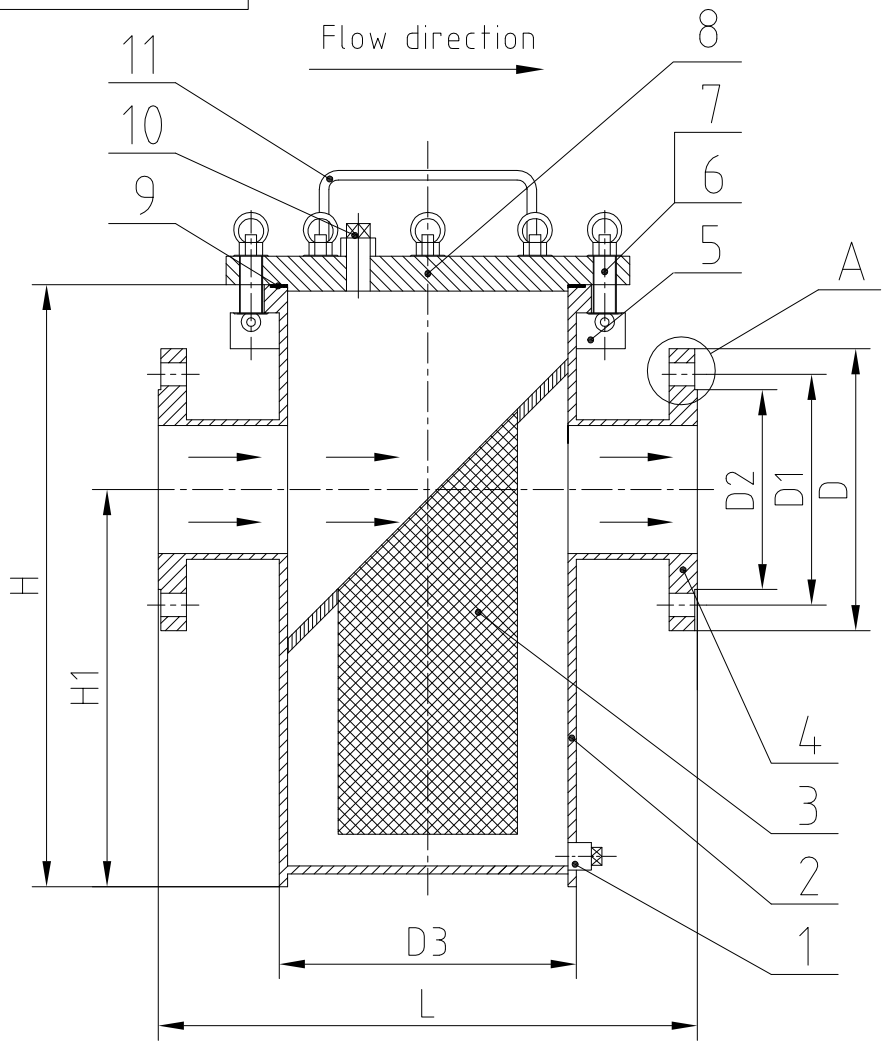

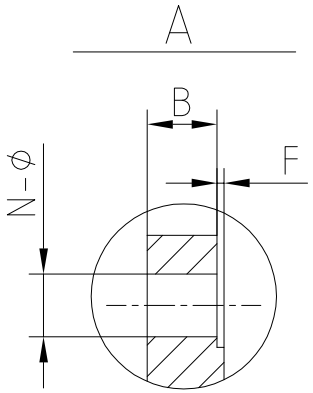

Performance Standard		
Nominal Bore	NPS	1 1/2″～8″
Nominal Pressure	Class	150LB
Pressure Test		
Shell Test	3.0	MPa
Seal Test	/	
Backseat Test	/	
Air Test	0.6	
Working Temperature	-29℃ ～ +425℃	
Suitable Medium	Water.Oil.Gas.Steam.etc	

1. Flange dimension conforms as to:ASME B16.5 RF
   Face finish 125-250 AARH
2. Testing record as to:API 598
3. Face-To-Face demension standard as to: MFR STD
4. Pressure-temperature conforms as to: ASME B16.34
5. Design & Manufacture as to:ASME B31.3
6. Drain plug shall be at the lowest possible position
7. Drain plug NPT threaded standard as to:ASME B1.20.1
8. Valve as per NACE MR-01-75(2002) requirement
9. Orange epoxy

1	Nondestructive Testing		
1.1	Pressure Test	API 598	Yes
1.2	Chemical composition certification	Mandatory	Yes
1.3	Penetrant Test	All Body Surface	Yes
1.4	Magnetic particle testing	All Body Surface	Yes

SIZE / NPS	L	D3	H	H1	D	D1	D2	B	N-Φ	F
1 1/2″	280	Φ108	300	180	Φ125	Φ98.4	Φ73	16	4-Φ16	2
2″	280	Φ133	300	180	Φ150	Φ120.7	Φ92	17.5	4-Φ19	2
2 1/2″	330	Φ133	350	220	Φ180	Φ139.7	Φ105	21	4-Φ19	2
3″	340	Φ159	400	260	Φ190	Φ152.4	Φ127	22.5	4-Φ19	2
4″	420	Φ219	470	310	Φ230	Φ190.5	Φ157	22.5	8-Φ19	2
5″	500	Φ273	540	380	Φ255	Φ215.9	Φ186	22.5	8-Φ22	2
6″	500	Φ273	620	430	Φ280	Φ241.3	Φ216	24	8-Φ22	2
8″	560	Φ325	780	530	Φ345	Φ298.5	Φ270	27	8-Φ22	2

NO.	NAME	MATERIAL	QTY	REMARK
11	Handle	ANSI 1025		
10	Vent Plug	ASTM A105		1/2″ WITH NPT
9	Gasket	SS316+GRAPHITE		Inner ring spiral wound gasket
8	Cover	ASTM A105		
7	Quick-Open Nut	A194 Gr.2H		
6	Quick-Open Bolt	A193 Gr.B7		
5	Bolt Retainer	ANSI 1025		
4	Flange	ASTM A105		Slip on flange 150LB-RF
3	Screen	A276 SS316		Mesh:20
2	Body	ASTM A105		
1	Drain Plug	ASTM A105		1/2″ With NPT

DATE APPD	Mar.15.2015
APPD BY	
CHECK BY	
DSCND BY	
DRAWD BY	

Quick-Opening
Lifting Eyebolt Type
Basket Type Strainer

SBM PTV TM

NPS 1 1/2″～8″
Class 150LB RF
Body: CS / Trim: SS316